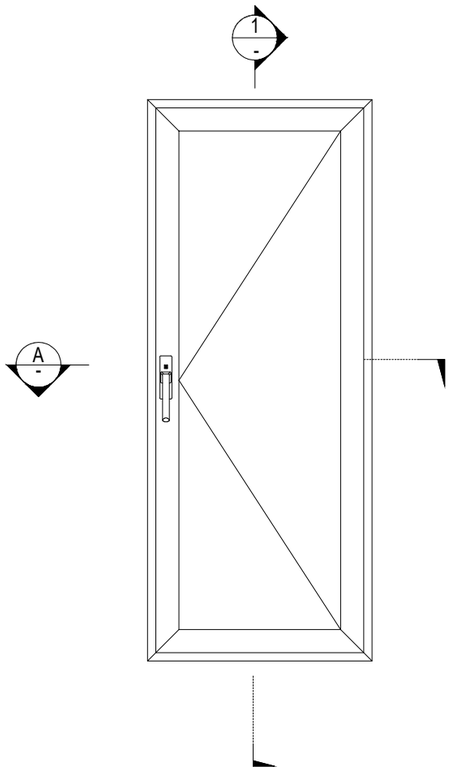

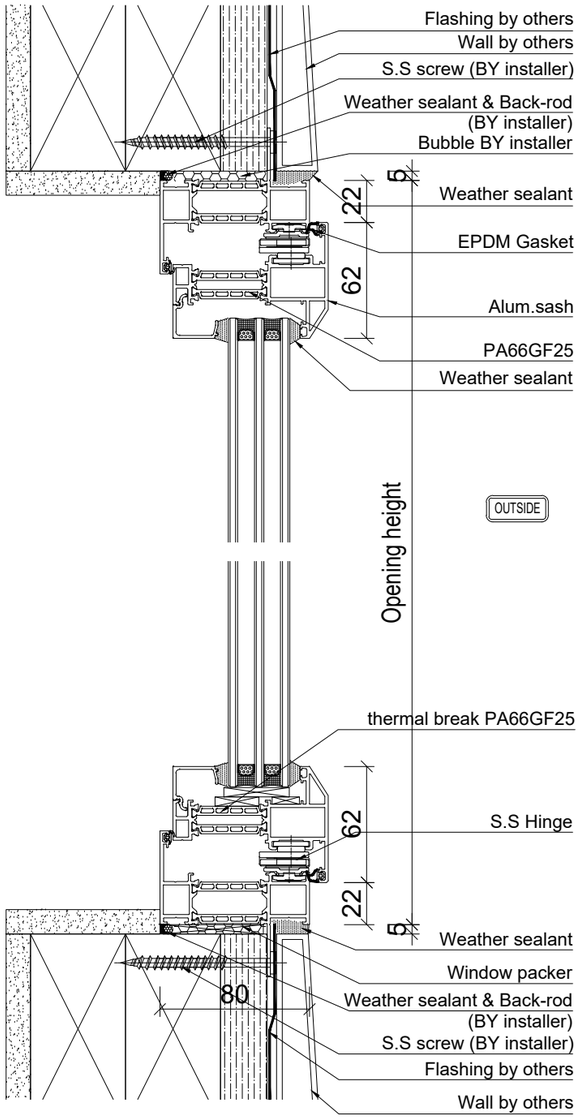

Section 1-1

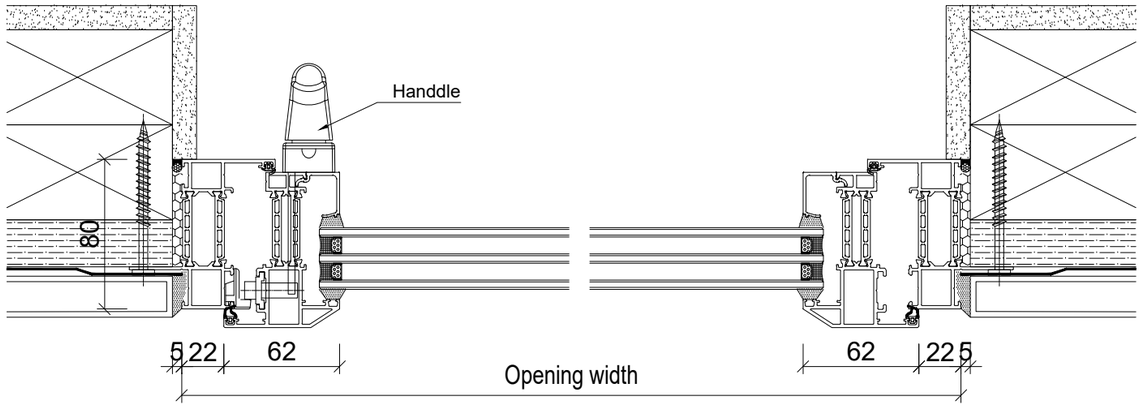

OUTSIDE

Section A-A